Development of Online Teaching Tools for Engineering: Immersive Virtual Reality Application for Manipulation of a Vertical Milling Machine Using Unity

Ronald Eduardo Pavón Sánchez
Faculty of Engineering
Universidad Tecnológica Centroamericana (UNITEC)
Tegucigalpa, Honduras
rpavonjr@unitec.edu

Ronald José Doblado Pérez
Faculty of Engineering
Universidad Tecnológica Centroamericana (UNITEC)
Tegucigalpa, Honduras
rjdoblado@unitec.edu

Rigoberto Castro Castro
Faculty of Engineering
Universidad Tecnológica Centroamericana (UNITEC)
Tegucigalpa, Honduras
rigobertocastros@gmail.com

2021 Machine Learning-Driven Digital Technologies for Educational Innovation Workshop | 978-1-6654-2763-0/21/$31.00 ©2021 IEEE | DOI: 10.1109/IEEECONF53024.2021.9733774

Abstract— **The global COVID-19 pandemic forced educational institutions at all levels to modify and migrate their teaching methodologies entirely to an online modality. Universities with technical programs were challenged to teach students the skills and abilities obtained only through laboratory or physical workshop experiences. This project focused on developing an immersive virtual reality application as a learning methodology to interact with a vertical milling machine. Additionally, we integrated a web plugin with similar functions to expand students' learning experience. Using the computerized design software Solidworks and Blender, we configured the assembly of a vertical milling machine to use in video game development software such as Unity. With this software, we created a virtual reality application (governed by fundamentals of educational theory) that allowed users to recognize the milling machine's parts and functions and simulate actual interactions. Additionally, with an accessible virtual reality kit, we added a web plugin with similar functions to achieve a greater scope of teaching. Thus, developing a virtual reality application as didactic support and training familiarized students with a vertical milling machine's parts and operations. This project can be implemented in different educational institutions seeking a dynamic and innovative way to teach machinery in a virtual environment.**

Keywords—online teaching, digital tools, virtual reality, computer simulator, machinery, educational innovation, higher education.

I. Introduction

Immersive technologies in education have increased students' commitment to learning and knowledge retention by 35% [1]. One of the immersive technologies impacting education is virtual reality (VR), which differs from traditional learning through technology that provides visual experiences and functional interactions in practical activities.

VR is an excellent educational tool to help users acquire knowledge and develop skills in an online environment. The Accreditation Board for Engineering and Technology (ABET) [6] indicates that traditional and distance learning methods should be consistent with the learning objectives proposed in the educational program.

Technological advances in VR have superseded 2-dimensional (2D) computer simulations with much more realistic 3D enhancements in virtual laboratories [4].

Budhu [5] developed a virtual laboratory where civil engineering students could perform laboratory practices anywhere using a virtual reality platform at convenient times. This platform enhanced conventional lab experiences by providing a variety of tests that would not be available in a physical laboratory. It enhanced the learning experience and knowledge transfer that traditionally could only be provided by physical laboratories.

The present project focused on developing a virtual reality application that provides users with an immersive and dynamic experience to manipulate a vertical milling machine. It contemplated using design principles in immersive VR applications in the educational field. The user can select two modes: The Exploration mode lets the users dynamically explore the essential parts of the vertical milling machine to recognize the elements and improve their technical language. In the Interactive mode, the user performs operations such as turning the milling machine on and off, moving the spindle, and learning the artboard's longitudinal and transverse advances.

The application is modeled to help students learn the use of the vertical milling machine, but it can be applied for any desired machinery. This tool also helps users learn the appropriate technical language when using the machinery and prepares them for work with the actual machine.

II. Methodology

A. Design principles optimize the pedagogy.

To ensure that the application is practical for learning and training systems, educators must adhere to design principles used in Immersive VR in education, according to [2].

1) Assume that every user is new to using VR:

Not everyone will master the controls, nor will they know how to visualize their surroundings. Upon startup, users need to be introduced to the basics of VR. If the application has different difficulty levels, first allow the user to choose the level from the start menu. This slow-start technique comes from years of educational content development.

2) Insert components into the user interface (UI) judiciously; less is desirable:

978-1-6654-2763-0/21/$31.00 ©2021 IEEE

Authorized licensed use limited to: Gyeongsang National Univ. Downloaded on February 06,2026 at 01:05:22 UTC from IEEE Xplore. Restrictions apply.

Gradually progress the content until the user demonstrates their mastery.

3) Didactic scaffolding.

Introduce cognitive steps one at a time. Increasing complexity step by step lets users explore and master each component in successive small lessons.

4) Co-design with expert teachers.

Co-designing means consulting early in development and continuously with expert teachers. Work with them to ensure that the content is appropriately contextualized, relevant, and generalized to the real world once the final product is finished.

5) Use guided exploration.

Free exploration can be helpful in the first few minutes to allow adaptation and incite curiosity but guide the user once the structured part of the lesson begins. Users can be guided by showing the steps to follow, signage, or flashing objects.

6) Minimize text reading.

Rely on informative graphics or small animations when possible. Prolonged text reading while using an HMD (Virtual Reality Helmet) can strain the eyes.

7) Permit minor errors at the beginning of training.

Learning often requires mistakes to occur to facilitate the increased cognitive effort. False alarm warnings can be developed to alert the user that an action should not be taken.

8) Test the game with newbies.

Game tests must be performed to get feedback from users. Ideally, they should be newbies because their psychological responses differ from users who previously have interacted with VR.

9) Provide discrete, immediate, and actionable feedback.

Feedback and adjustments must be integrated into the user's mental processing. This takes time.

10) Design opportunities for reflection.

Developers and educators are currently (2021) experimenting with reflection exercises in VR. It should be investigated how to incorporate opportunities for reflection practically using head-mounted displays (HMD).

11) Encourage interactive collaborations.

Multiplayer experiences are expensive but worth performing. Try to include activities that make the experiences more social and collaborative, either with a non-player character (NPC) or multiplayer integration.

B. Milling machine model selection and part assembly in a virtual platform

1) Selection parameters

The model selected was an RF-31 vertical milling machine. The assembly has 55 parts. This assembly was transported to FBX for use in Unity (see Fig. 1).

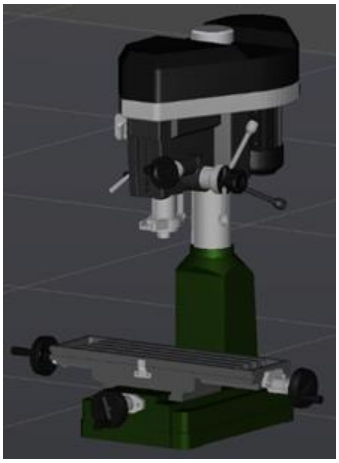

Fig 1. Assembly in FBX format in Unity

To select parts for the machine assembly, we first needed to define what parameters the machine should have. One of the most critical parameters is that it contains a sufficiently large number of parts for the application to present a realistic visualization of the moving elements similar to an actual machine in use. Another parameter is that the assembly should be based on a real model for a complete learning experience with each element.

C. Development of interactive functions.

Based on the knowledge of the operation of the milling machine and its different parts, we chose the necessary interactions that it must have to perform the basic milling operations.

The interactions of interest to this project were:

- Turning the milling machine on and off.
- Longitudinal and transverse movements of the transverse carriage.
- Spindle crank movement and tension adjustments.

Each interaction corresponded to a series of objects that must rotate or move according to the desired interaction. All interactions were included in the app's Interaction mode and could not be performed in Exploration mode.

Before starting specific configurations, each object of interest must be configured with the necessary components to behave as interactive objects. For this, the following complements were added to the objects:

- Rigid body.

Rigid body parameters were included, such as mass and the use of gravity. The object could offer physical property calculations such as angular and linear velocity and center of mass.

- Box collider.

The box collider defines the object's collision parameters. Its usefulness is to determine the detection range in which the hand interacts with the object.

- XR Grab Interactable.

This component of the XR Interaction Toolkit gives interactive properties to the object, allowing basic "grip"

Authorized licensed use limited to: Gyeongsang National Univ. Downloaded on February 06,2026 at 01:05:22 UTC from IEEE Xplore. Restrictions apply.

functionality. It can be attached to the selected interactor and followed, obeying the object's physics.

- Outline

Outline requires a code to highlight objects, setting the highlight color and thickness.

A code was programmed to detect when the right interactor would contact an interactive object and store a variable. The object saved in the variable extracts the "Outline" component and activates or deactivates it according to whether or not it is detected.

D. Development of scanning functions

Based on the knowledge of the milling machine parts, we selected the essential parts to help the user learn the correct terms and the parts' usefulness.

The selected parts were:

- Transverse carriage.
- Column.
- Spindle.
- Switch.
- Fine-forward crank.
- Manual advance crank.
- Longitudinal advance crank.
- Transverse advance crank.
- Engine.
- Spindle lock lever.
- Column lever.

1) Naming and describing parts.

Each part was named within the Hierarchy tab with the appropriate name to display and the part description.

2) Configuring objects in exploration mode.

In Exploration mode, the configuration for objects is more straightforward than in the Interaction configuration. Objects should not interact directly with the hand, so ray casting interaction was enabled. For that, the following components were added:

a) Box collider

Used to define the object's collision parameters, the box collider helps determine the detection range where the ray cast interacts with the object.

b) XR Simple Interactable

A component of the XR Interaction Toolkit that gives simple interactive properties to the object. With this component, the object is only detected by the interactors.

c) Outline

The outline is a code used to highlight objects, setting the highlight color and thickness.

3) Display programming

A code was programmed to detect when the right interactor was in contact with an interactive object and store it in a variable. From the object saved in the variable, two components were extracted. One of them was the "Outline" code, activated or deactivated according to whether it is being detected or not. The other is a string variable that contains the name of the object.

This code was added on a canvas. The canvas was configured to follow the user's camera and not depend on a fixed position.

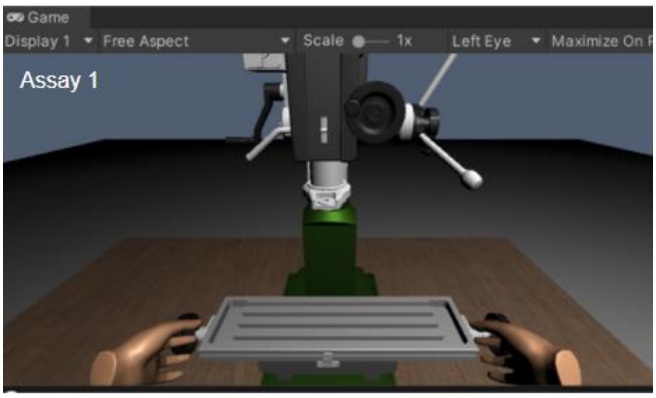

Fig 2. Display in exploration mode.

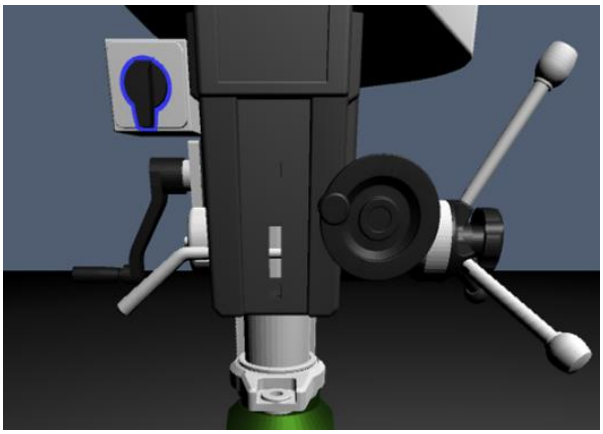

Fig 3. Switch display in the VR platform.

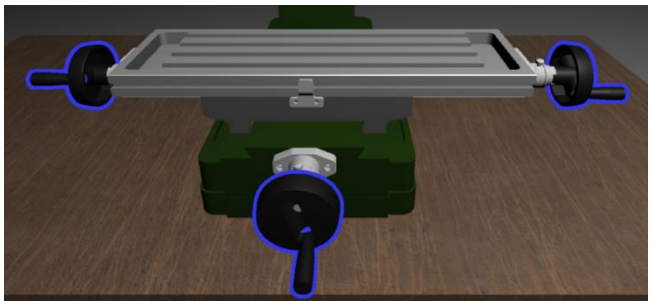

Fig 4. Visualization of longitudinal and transverse motion cranks in theVR platform.

E. Web plugin development

Because VR technology is not accessible to many students, we developed a plugin to navigate the model using a web browser, perform the same scan operations with the VR

Authorized licensed use limited to: Gyeongsang National Univ. Downloaded on February 06,2026 at 01:05:22 UTC from IEEE Xplore. Restrictions apply.

platform, and limit interactive operations to the basic movements of the milling operation.

A new project was created because this add-on does not require the same VR settings and only requires the selected model, programming that enables navigation to the user and visual elements such as text and highlighting.

To develop this complement, we considered the functions of the Perseverance Rover explorer model [3].

1) Programming the display in Exploration mode.

We defined the interactions the user should have with the model as follows:

- Approach to the object.
- Focused camera rotation.
- Selection of pieces of interest.

For the approach, we programmed a code to interpret the rotation of the scroll wheel and transform it into the increase or decrease of the camera's field of view.

For the camera rotation, we programmed a code that interpreted the mouse movements on the vertical and horizontal axes when the left click was pressed, simulating a drag of the piece. This was then transformed into the camera's rotation around the object at a specified speed factor.

For the selection of pieces, the following codes were added to each piece of interest:

- Outline

The outline is a code used to highlight objects, setting the highlight color and thickness.

- Interaction

Code was developed to interpret the click on a part, causing a highlight to be displayed, the name, and a short description of the selected object.

For this, we had to create a component that corresponds to the desired view of the camera to be able to transition from the current point to the predetermined view of the selected object.

Within the Canvas, there were two text elements. The first element corresponded to the name of the part and was located at the top of the view. The second element was a small default description for each part located underneath it.

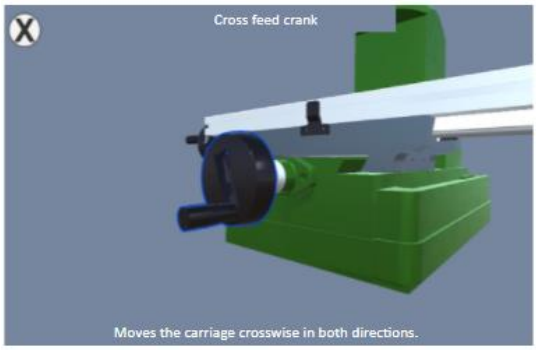

Fig 5. Cross-sectional advance crank view in the web plugin.

2) Programming the visualization in Interaction mode.

To develop the interactive mode, we integrated nine buttons corresponding to movement actions into the three action axes of on, off, and changing the vertical milling machine's rotation. The camera's same zooming and rotating functions were maintained to visualize the actions from the desired angle and position. The control panel was located and anchored in the lower-right corner of the display canvas, as shown in Fig. 6.

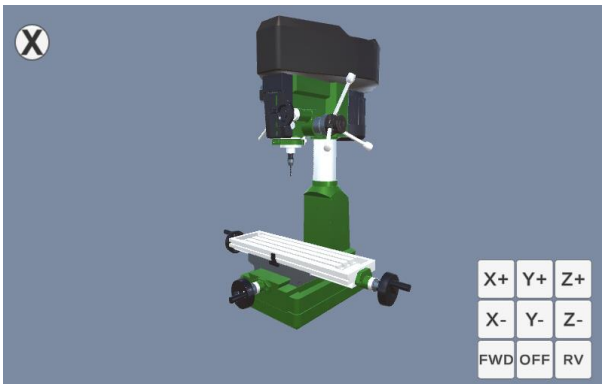

Fig 6. Display in interaction mode (web add-in)

We assigned a control object and an output object for each direction to program the movements. Additionally, to indicate the control and output objects, we assigned a color code to highlight the piece that acts as control (green) and output (blue). In order to simulate the physical conditions, the movement limits were programmed as stated in the milling machine manual.

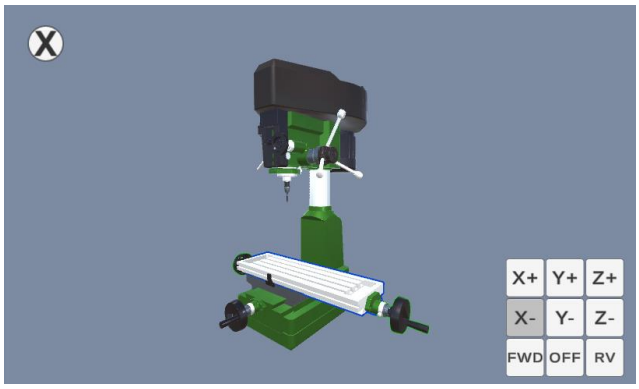

Fig 7. Display moving parts (web plugin)

Authorized licensed use limited to: Gyeongsang National Univ. Downloaded on February 06,2026 at 01:05:22 UTC from IEEE Xplore. Restrictions apply.

III. Results

A. *Exploration mode and Interaction mode*

The virtual reality tool was developed in Exploration mode. It was selected as the first learning lesson since, in this way, the user can assimilate into the environment and recognize the parts of the machine through a free exploration without steps to follow. This methodology encourages the user to experiment with the machine.

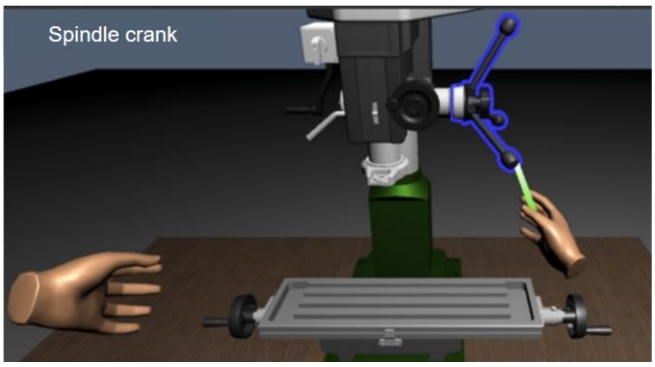

Fig 8. Crank usage in the application (Exploration mode).

Similarly, in the Exploration mode, complex tasks involving the user interacting directly with the machine were not integrated, thus providing the opportunity to explore and identify each element before the lesson in Interaction mode.

The integration of scanning functions allowed the user to visualize the vertical milling machine at full scale in a virtual environment. Using the ray-casting function built into the controls, the user can select objects of interest just by pointing at them. When the user points to them, the element's name displays, as indicated in Fig. 9 (Mesa de trabajo = work table.)

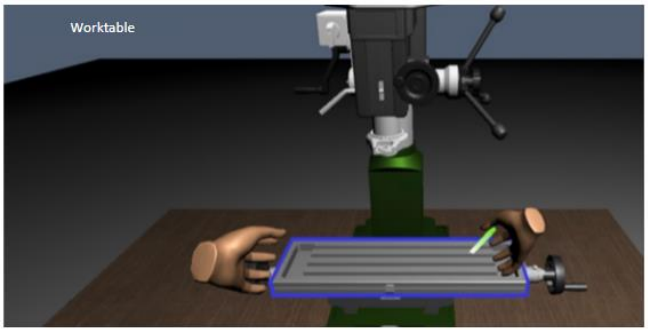

Fig 9. In-application artboard manipulation (Exploration mode)

During the development of the Interaction mode, we integrated a guided exploration that teaches the user the order of actions to be performed when operating the milling machine.

Three interactive functions with the vertical milling machine were programmed for interactions with eight different virtual machine elements. The fully interactive elements in the scene were:

- The ignition switch in all three positions (forward, off, reverse).
- Three cranks of longitudinal and transverse movement of the work table.
- Spindle crank and butterfly thread adjustments.
- Fine-forward crank.
- Spindle fastening insurance.

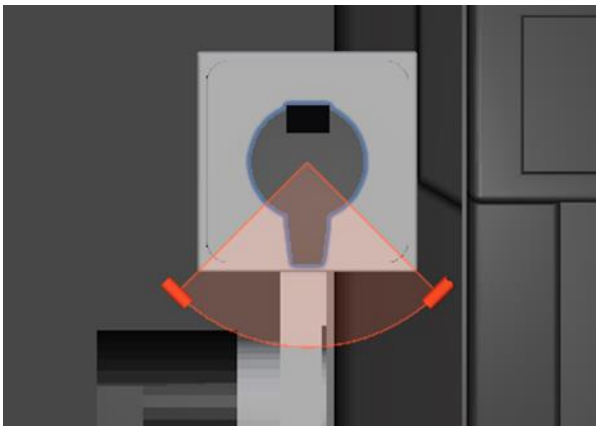

Fig 10. Interaction with the power switch

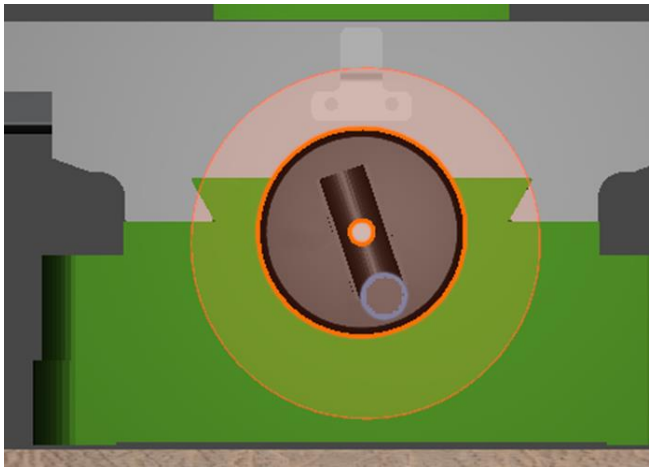

Fig 11. Interaction with the table-moving cranks.

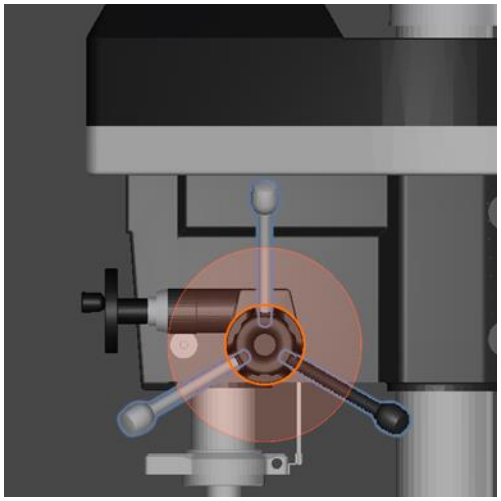

Fig 12. Interaction with the spindle crank.

Authorized licensed use limited to: Gyeongsang National Univ. Downloaded on February 06,2026 at 01:05:22 UTC from IEEE Xplore. Restrictions apply.

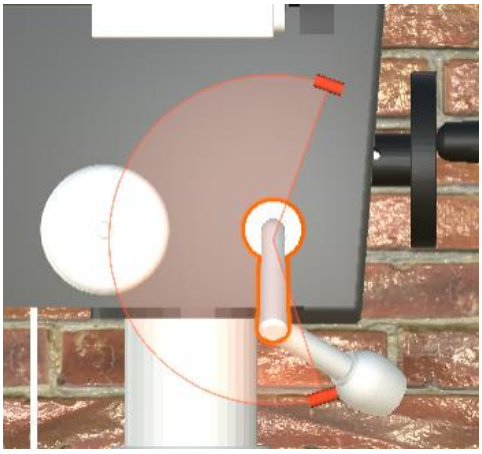

Fig 13. Interaction with spindle insurance.

Fig 14. Fine-forward crank interaction.

B. *Web plugin development*

The development of the web plugin was added to provide an additional resource for users who do not own a virtual reality kit. This add-on contemplates the integration of both modes, exploration and integration, and are always governed by the applicable design principles. This add-on is a more accessible and practical product because most students have a computer to access a web browser.

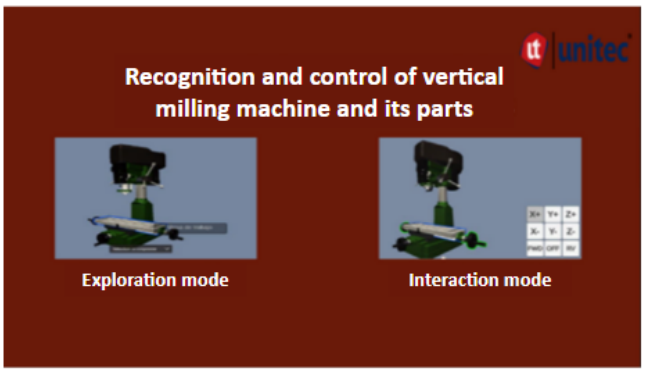

Fig 15. Web platform initial menu.

The description of the vertical milling machine elements was integrated into the Exploration mode.

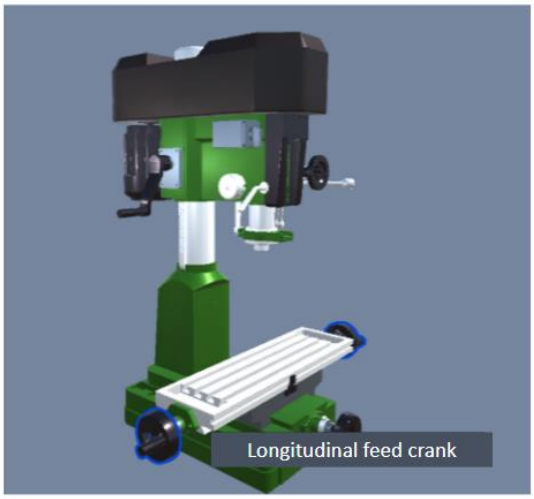

Fig 16. Exploration mode (web platform)

The Interaction mode contains nine basic visualization functions, including the movements in the three axes in both directions (forward and reverse) and functions for on, off, and change-of-rotation. The user operates a set of buttons to trigger these movements in the desired direction (see Fig. 17).

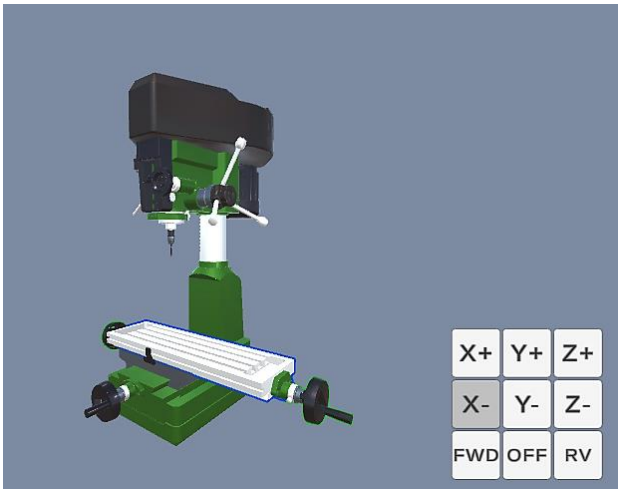

Fig 17. Interaction mode (web platform)

IV. Conclusions

A virtual reality application was developed to serve as didactic support and training to recognize and use the parts and operations of a vertical milling machine. The RF-31 milling machine model with 55 pieces was selected and scaled to actual dimensions in the VR, ensuring an excellent virtual experience for the user.

The Interaction mode was designed to simulate the use of the milling machine according to real physical conditions, applying forces and torques for the different operations, including the on, off and change of rotation of the cutting tool, rotation of the spindle, longitudinal and transverse movements of the work table, and movement and fixation of the spindle.

The Exploration mode was designed so the user could interact with the different parts of the milling machine, become familiar with the parts, and see a short description of the part's use.

Authorized licensed use limited to: Gyeongsang National Univ. Downloaded on February 06,2026 at 01:05:22 UTC from IEEE Xplore. Restrictions apply.

Additionally, we developed a web platform for users without access to a virtual reality kit. On this platform, students can visualize and interact with the vertical milling machine, using the exploration and interactive functions.

Virtual reality in engineering laboratories has excellent advantages in distance education, replacing physical laboratories. The virtual tool developed in this work is an alternative for students to acquire knowledge and technical experiences with manufacturing machinery. This tool provides an excellent virtual experience, providing realistic learning simulations that efficiently replace traditional activities in a physical laboratory. The application of virtual reality tools in distance education models for engineering has a significant impact, improving the quality of learning and acquisition of technical experience.

In subsequent works, the project's impact on the student's learning must be measured using pedagogical techniques that compare learning through face-to-face experimentation with virtual laboratory teaching outcomes. With this, improvements in the virtual environment can be made to improve the online learning experience.

ACKNOWLEDGMENT

The authors would like to acknowledge the technical and financial support of Writing Lab, Institute for the Future of Education, Tecnologico de Monterrey, Mexico, in the production of this work.

REFERENCES

[1] Microsoft, "Mixed Reality para Educación," 2020. [Online]. Available: https://www.microsoft.com/es-es/education/mixed-reality.

[2] M. Johnson-Glenberg, "Immersive VR and Education: Embodied Design Principles that include gestures and hand controls.," 2018.

[3] NASA, "Mars Rover Perseverance 2020," 2020. [Online].

[4] C. Bouras, E. Giannaka, V. Kapoulas, M. Nani and T. Tsiatsos, "Building e-learning communities: The case of VirRAD," in *Advanced Learning Technologies, IEEE International Conference*, 2003.

[5] M. Budhu, "Virtual laboratories for engineering education," in *International conference on engineering education*, Manchester, UK, 2002.

[6] Accreditation Board for Engineering & Technology (ABET), "ABET," 2021. [Online]. Available: https://www.abet.org/. [Accessed 2021].

[7] G. Peterson and L. Feisel, "e-Learning: The challenge for engineering education," in *eTEE Conference*, Davos, Switzerland, 2002.

[8] V. Chang and J. A. del Alamo, "Collaborative webLab: Enabling collaboration in an online laboratory," in *World Congress on Networked Learning in a Global Environment*, 2002.

[9] J. Henry and C. Knight, "Modern engineering laboratories at a distance," in *International Journal of Engineering Education*, 2003.

Authorized licensed use limited to: Gyeongsang National Univ. Downloaded on February 06,2026 at 01:05:22 UTC from IEEE Xplore. Restrictions apply.